| | GD-TPGPTZ36A4C | GD-TPGPTZ31B4C |
|---|---|---|
| | | |
| | ApexVision | |
| | HOT , 3μm 5μm | |
| | 640×512@15μm | 1280×1024@10μm |
| | , 1280×1024 | / |
| | ≤15mK@30°C | |
| | 30mm~300mm (35.49°×28.72°~1.83°×1.47° | 30mm~300mm (32.47°×26.83°~2.37°×1.87° |
| | | |
| | , 26 | |
| | , 2D/3D , , | |
| | 20km ( 2m×2m) | |
| | | |
| | 1/1.8" CMOS | |
| | 2688×1520 | |
| | : 0.001lux@f/1.6; : 0.0001lux@f/1.6 | |
| | 10~860mm; : 23.7° ( )~0.7° ( ); : 13.5° ( )~0.4° ( ) | |
| | 3km ; 10km | |
| | , , , , 2D/3D , , , , , | |
| | | |
| | : 0°~360° ; : -60°~40° | |
| | : 0.01°/ s 30°/s : 0.01°/ s 15°/s | |
| | , , , , , , , , , | |
| | | |
| | H.265; H.264; MJPEG | |
| | JPEG | |
| | : 1280×1024/1280× 720/640 ×512, 640×512/320× 256; : 2688×1520/2560× 1440/1920× 1080/1280 ×720/704× 576/352× 288, 1280×720/704× 576/352× 288 | |
| | | |
| | IPv4, HTTP, FTP, SMTP, RTSP, RTP, TCP, UDP, DHCP, ONVIF, GB/T28181,GB35114-A | |
| SDK/API | SDK/API | |
| | 128G TF | |
| | | |
| | / | |
| | | |
| | 20 , , 2 : , | |
| | IP ; ; | |
| | , , , ( ), ( ), | |
| | | |
| | DC48V±10% | |
| | 1 , 100M | |
| | 8 , 2 | |
| | 1 RS485, 1 1 | |
| | | |
| | -40℃~+70℃ | |
| | IP66 | |
| | | |
| | | |
| | ≤200W; ≤320W | |
| | 540mm ×662mm ×634mm | |
| | 50kg | |
| | | |

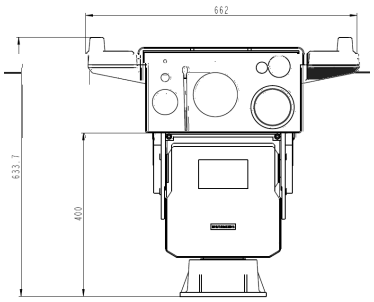


*